LOFT 9 Bar 550mm STR-PTS 230V

GRADE 304 Stainless Steel

Model/SKU: LOF09221-PTS-####*
(*where #### is the relevant finish code)

HTR Technical Specifications:

Size: 563mm (width) x 774mm (height)
Power: 100 Watts
Current: 0.43 Amps
Volts: 230 VAC
IP Rating: IPX5

Controller Fitted: PTSelect Switch (PTS)

Controller Features:

• Temperature Adjustment • ON / OFF Switch • RED LED Indicator

Controller Technical Specifications:

INPUT Voltage Range: 190VAC~250VAC
Operating Frequency: 50 Hz ±2%
Load Capability: 0.18A~4A
Load Control Range: 40~100%
Standby Current: 3.0mA

Suggested Height of Electrical Outlet = 1000mm
(this is only an indication as every installation is different)

NOTES:
***EO** Denotes DUAL ENTRY Electrical Outlet connection*
***PTS** Denotes location of PTSelect Switch*

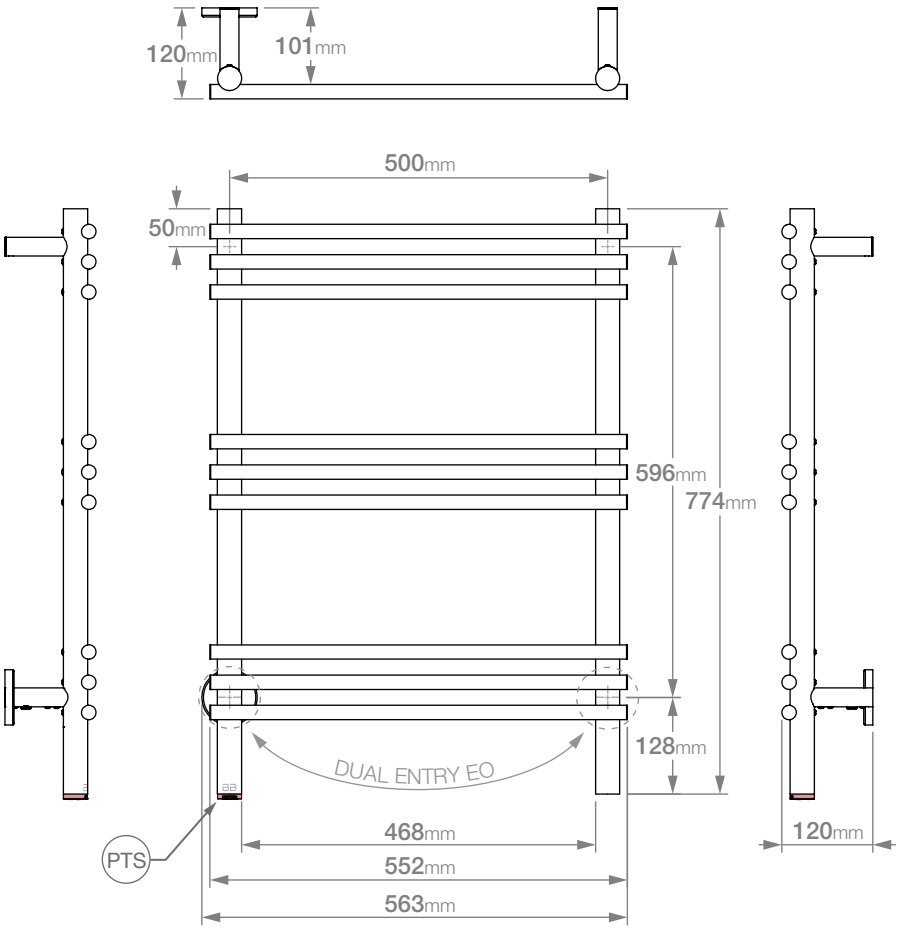

Copyright Bathroom Butler® 2021

Dimensions given are in **mm**. Bathroom Butler® reserves the right to alter and/or remove designs from time to time without prior notice. This drawing is to be used for reference purposes only. E &O.E.

BATHROOM BUTLER™

DRY ELEMENT TECHNOLOGY | RAPID HEATING 10-15min | PERSONAL TEMPERATURE SELECT | DUAL ENTRY | GRADE 304 STAINLESS STEEL | 15 YEAR LIMITED GUARANTEE

USA: 631.464.2851 • customercare@bathroombutler.com • www.bathroombutler.com/us
South Africa: 0860 104 653 • info@bathroombutler.co.za • www.bathroombutler.com/za
Australia: +61 436 487 420 • info_aus@bathroombutler.com • www.bathroombutler.com/au
Mauritius: 230 242 1248 • sales@lisinggroup.com • www.bathroombutler.com

Document version **033**
Product version **030**