NATURAL 5 Bar 500mm CRV-TDC 230V

GRADE 304 Stainless Steel

Model/SKU: NAT05222-TDC-####*
(*where #### is the relevant finish code)

HTR Technical Specifications:

Size: 518mm (width) x 735mm (height)
Power: 65 Watts
Current: 0.28 Amps
Volts: 230 VAC
IP Rating: IPX5

Controller Fitted: TDC Timer (TDC)

Controller Features:

- 4 On/Off programs in a 24hr period
- Temperature Adjustment
- 4 Modes of operation
- Screen Auto-Lock
- One button push - QUICK RUN
- 24hr Clock

Controller Technical Specifications:

INPUT Voltage Range: 190VAC~250VAC
Operating Frequency: 50 Hz ±2%
Load Capability: 0.18A~4A
Load Control Range: 40~100%
Standby Current: 3.5mA

Suggested Height of Electrical Outlet = 1050mm
(this is only an indication as every installation is different)

NOTES:
****EO** Denotes DUAL ENTRY Electrical Outlet connection*
****TDC** Denotes location of TDC Timer*

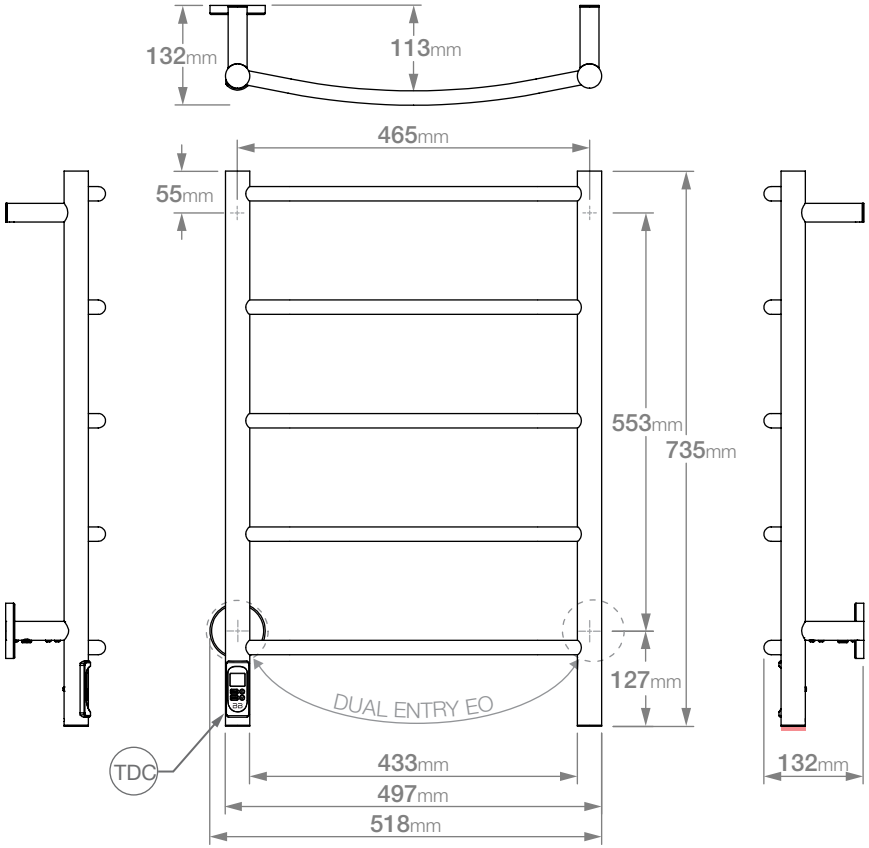

Dimensions given are in **mm**. Bathroom Butler® reserves the right to alter and/or remove designs from time to time without prior notice. This drawing is to be used for reference purposes only. E &O.E.

Copyright Bathroom Butler® 2021

BATHROOM BUTLER™

DET DRY ELEMENT TECHNOLOGY | RAPID HEATING 10-15min | PERSONAL TEMPERATURE SELECT | DUAL ENTRY | GRADE 304 STAINLESS STEEL | 15 YEAR LIMITED GUARANTEE

USA: 631.464.2851 • customercare@bathroombutler.com • www.bathroombutler.com/us
South Africa: 0860 104 653 • info@bathroombutler.co.za • www.bathroombutler.com/za
Australia: +61 436 487 420 • info_aus@bathroombutler.com • www.bathroombutler.com/au
Mauritius: 230 242 1248 • sales@lisinggroup.com • www.bathroombutler.com

Document version **033**
Product version **030**